WM EASY

The innovative WM EASY Loading Ramp has been designed to meet the needs of speed, efficiency and space, in response to the evolving Light Commercial Vehicle market.
The WM EASY series enhances the range of WM ramps, with three main innovations:

- The new movement with lateral positioning, allows the cargo area to be completely uninterrupted for normal use.
- The Floor surface is anti-slip aluminum, perforated with alternating convex holes, made exclusively by WM. Thanks to this material, the ramp is extremely light and safe during loading and unloading.
- The new special hook fastening keeps the floor of the vehicle completely flush.

The yellow reflective sides, helps the ramp be visible even in low-light conditions.
The ramp is constructed in aluminum, with a loading capacity of 660 lbs and it's equipped with anti-fall lateral edges on each side. This model of ramp is available in an 31" width, with lengths between 78 and 89 inches. The WM EASY ramp can be installed on any type of commercial vehicle, thanks to its positioning/fitting at the side that minimises the overall dimensions and ensures full visibility at the back.

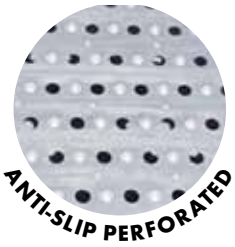

DIMENSIONS & LOAD CAPACITY

POSITIONS

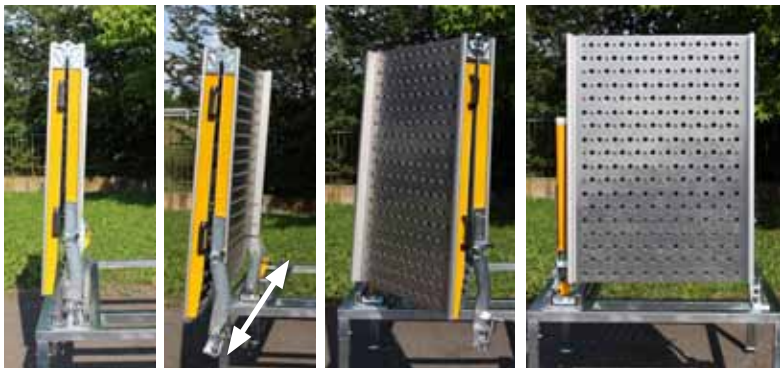

STORED **POSITION** | **SLIDE IN SLIDE OUT** | **EXTERNAL SWIVEL** | **CLOSED**

USES

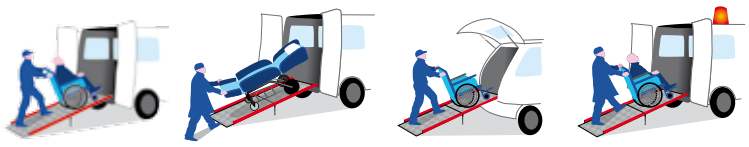

TECHNICAL DATA

www.wmsystem.com

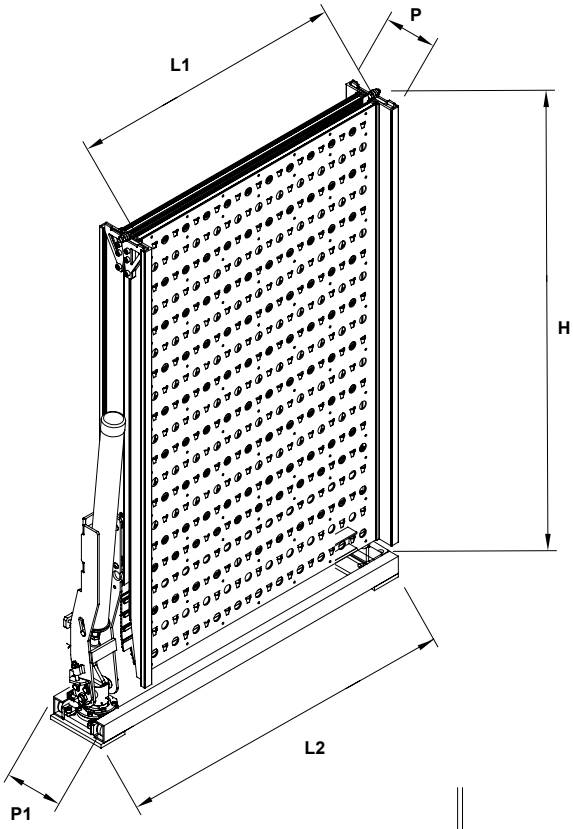

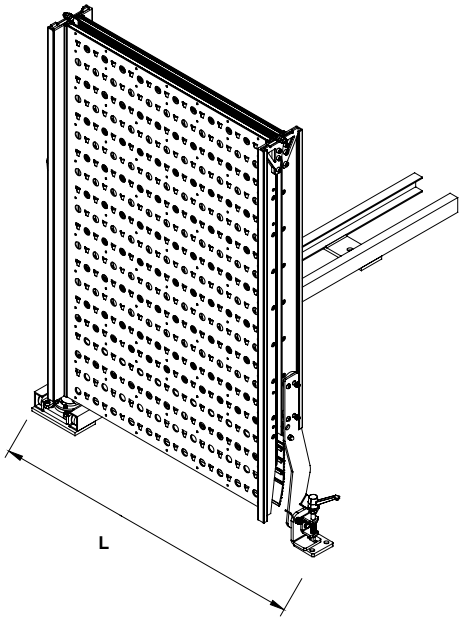

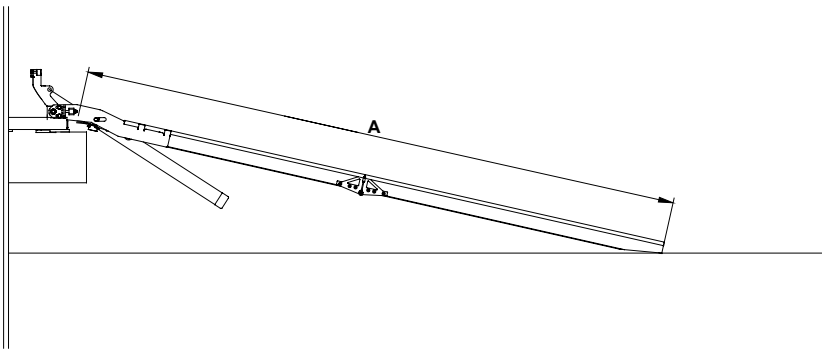

POWER REQUIRED: c.a. 18 lbs
SPACE REQUIRED: c.a. 6 inches
WARRANTY: 2 years

LOAD CAPACITY
660 lbs

Code	Model	A	Load Capacity	H (inch)	L (inch)	L1 (inch)	L2 (inch)	P (inch)	P1 (inch)	Weight
9ALE.001	WM EASY 31" x 78"	78"	660 lbs	46	40.5	31	45	4.5	6.5	81 lbs
9ALE.002	WM EASY 31" x 88.5"	88.5"	660 lbs	50.5	40.5	31	45	4.5	6.5	90 lbs
9ALE.003	WM EASY 31" x 98"	98"	660 lbs	55.5	40.5	31	45	4.5	6.5	99 lbs
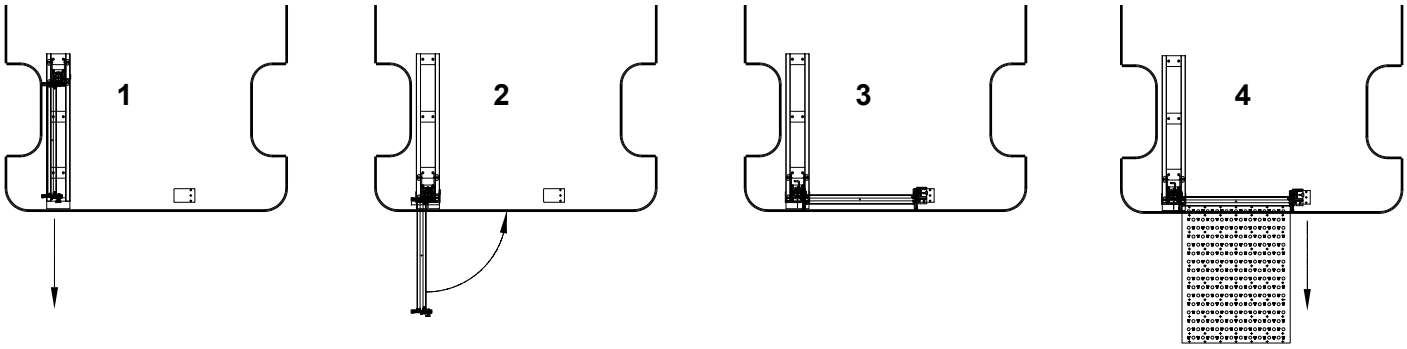
SEQUENCE OF MOVEMENTS